Udo's Worksheet

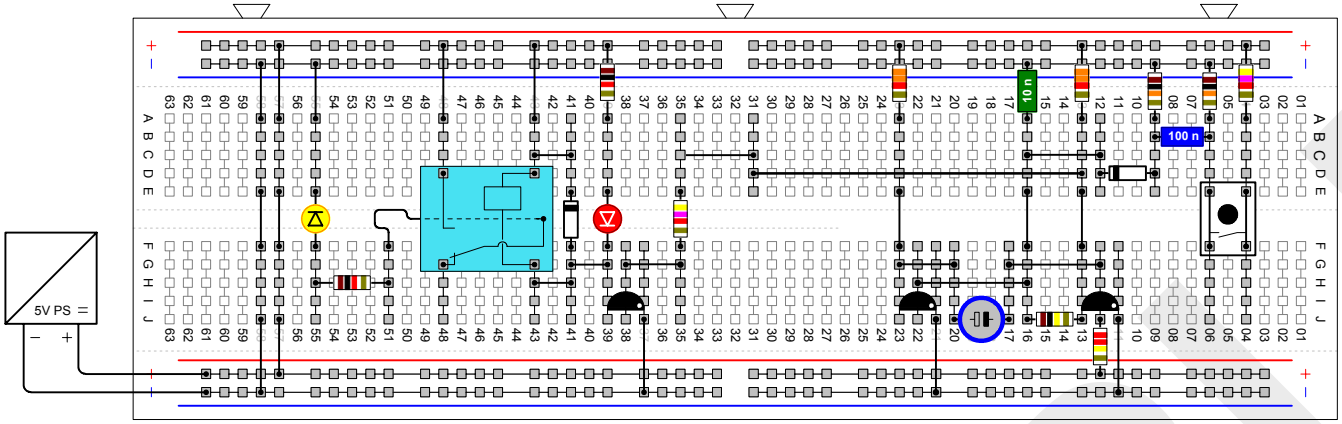

HIGH TRIGGERED MONOSTABILE MULTIVIBRATOR (ONE SHOT) WITH NPN TRANSISTORS AND POWER UP RESET,
CONFIGURED TO OPERATE ACTIV HIGH TRIGGERED NPN TRANSISTOR DRIVER WITH 5 VDC RELAY

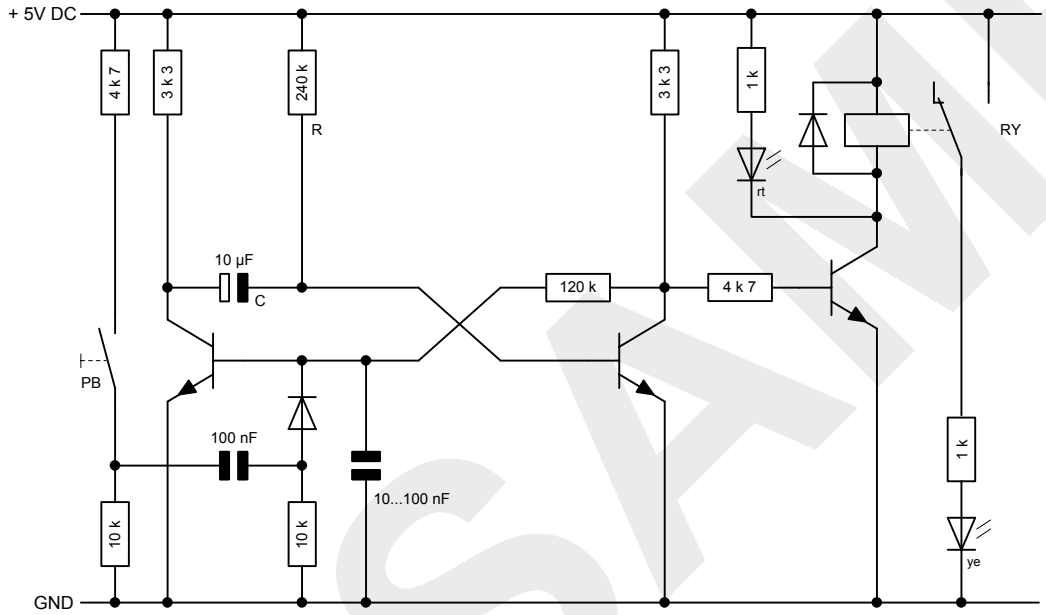

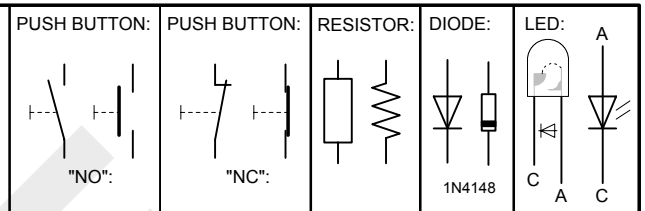

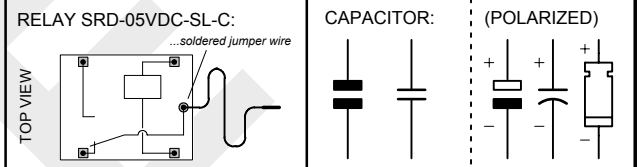

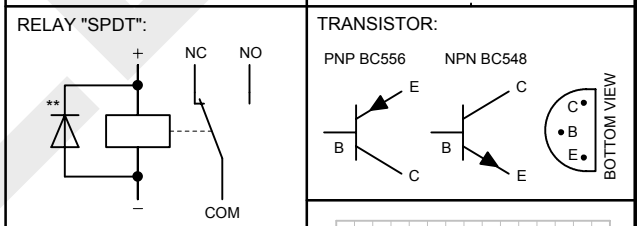

** FLYBACK DIODE TO ELEMINATE HIGH VOLTAGE SPIKES ACROSS THE RELAY COIL DURING ENERGIZE AND DE-ENERGIZE (SWITCHING ON & OFF).

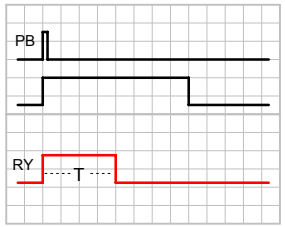

PULSE TIME PERIODE:

T = 0.693 x C x R

T = 0.693 x 0.00001 x 240000 = 1.7 sec

FOR FULLY COMPONENT SPECS. SEE MANUFACTURER DATASHEETS

FIGURES ARE APROXMEDIATELY, DUE TO COMPONENT TOLERANCES !

TI-1	A4	udo@elgers.com	ue-ERT20210615-40	15-JUN-2021
040	A	TRANSISTOR MONO FLOP (ONE SHOT) - EXPERIMENT 03		

SAMPLE

(c) Udo Elger